Cambridge International AS & A Level

Cambridge International Examinations
Cambridge International Advanced Subsidiary and Advanced Level

CANDIDATE NAME

CENTRE NUMBER | | | | | |

CANDIDATE NUMBER | | | | |

7314708539

PHYSICS **9702/42**

Paper 4 A Level Structured Questions **October/November 2016**

2 hours

Candidates answer on the Question Paper.

No Additional Materials are required.

READ THESE INSTRUCTIONS FIRST

Write your Centre number, candidate number and name on all the work you hand in.
Write in dark blue or black pen.
You may use an HB pencil for any diagrams or graphs.
Do not use staples, paper clips, glue or correction fluid.
DO **NOT** WRITE IN ANY BARCODES.

Answer **all** questions.

Electronic calculators may be used.
You may lose marks if you do not show your working or if you do not use appropriate units.

At the end of the examination, fasten all your work securely together.
The number of marks is given in brackets [ ] at the end of each question or part question.

This document consists of **24** printed pages.

© UCLES 2016

CAMBRIDGE International Examinations

Data

speed of light in free space	$c = 3.00 \times 10^{8}\,\text{m s}^{-1}$
permeability of free space	$\mu_0 = 4\pi \times 10^{-7}\,\text{H m}^{-1}$
permittivity of free space	$\varepsilon_0 = 8.85 \times 10^{-12}\,\text{F m}^{-1}$
	$(\frac{1}{4\pi\varepsilon_0} = 8.99 \times 10^{9}\,\text{m F}^{-1})$
elementary charge	$e = 1.60 \times 10^{-19}\,\text{C}$
the Planck constant	$h = 6.63 \times 10^{-34}\,\text{J s}$
unified atomic mass unit	$1\,\text{u} = 1.66 \times 10^{-27}\,\text{kg}$
rest mass of electron	$m_e = 9.11 \times 10^{-31}\,\text{kg}$
rest mass of proton	$m_p = 1.67 \times 10^{-27}\,\text{kg}$
molar gas constant	$R = 8.31\,\text{J K}^{-1}\,\text{mol}^{-1}$
the Avogadro constant	$N_A = 6.02 \times 10^{23}\,\text{mol}^{-1}$
the Boltzmann constant	$k = 1.38 \times 10^{-23}\,\text{J K}^{-1}$
gravitational constant	$G = 6.67 \times 10^{-11}\,\text{N m}^2\,\text{kg}^{-2}$
acceleration of free fall	$g = 9.81\,\text{m s}^{-2}$

© UCLES 2016

Formulae

uniformly accelerated motion	$s = ut + \frac{1}{2}at^2$ $v^2 = u^2 + 2as$
work done on/by a gas	$W = p\Delta V$
gravitational potential	$\phi = -\frac{Gm}{r}$
hydrostatic pressure	$p = \rho gh$
pressure of an ideal gas	$p = \frac{1}{3}\frac{Nm}{V}\langle c^2 \rangle$
simple harmonic motion	$a = -\omega^2 x$
velocity of particle in s.h.m.	$v = v_0 \cos \omega t$ $v = \pm \omega \sqrt{(x_0^2 - x^2)}$
Doppler effect	$f_o = \frac{f_s v}{v \pm v_s}$
electric potential	$V = \frac{Q}{4\pi\varepsilon_0 r}$
capacitors in series	$1/C = 1/C_1 + 1/C_2 + \ldots$
capacitors in parallel	$C = C_1 + C_2 + \ldots$
energy of charged capacitor	$W = \frac{1}{2}QV$
electric current	$I = Anvq$
resistors in series	$R = R_1 + R_2 + \ldots$
resistors in parallel	$1/R = 1/R_1 + 1/R_2 + \ldots$
Hall voltage	$V_H = \frac{BI}{ntq}$
alternating current/voltage	$x = x_0 \sin \omega t$
radioactive decay	$x = x_0 \exp(-\lambda t)$
decay constant	$\lambda = \frac{0.693}{t_{\frac{1}{2}}}$

© UCLES 2016

[Turn over

Answer **all** the questions in the spaces provided.

1 **(a)** Define *gravitational field strength*.

.....

.....[1]

(b) The nearest star to the Sun is Proxima Centauri.
This star has a mass of 2.5×10^{29} kg and is a distance of 4.0×10^{13} km from the Sun.
The Sun has a mass of 2.0×10^{30} kg.

(i) State why Proxima Centauri may be assumed to be a point mass when viewed from the Sun.

.....

.....[1]

(ii) Calculate

1. the gravitational field strength due to Proxima Centauri at a distance of 4.0×10^{13} km,

field strength = ... $N\,kg^{-1}$ [2]

2. the gravitational force of attraction between the Sun and Proxima Centauri.

force = ... N [2]

© UCLES 2016

(c) Suggest quantitatively why it may be assumed that the Sun is isolated in space from other stars.

.....

.....

.....[2]

[Total: 8]

2 **(a)** The equation of state for an ideal gas of volume V at pressure p is

$$pV = nRT$$

where R is the molar gas constant.

State what is meant by

(i) the symbol n,

.....

.....[1]

(ii) the symbol T.

.....

.....[1]

(b) An ideal gas is held in a container of volume $2.4 \times 10^3\,\text{cm}^3$ at pressure $4.9 \times 10^5\,\text{Pa}$. The temperature of the gas is 100 °C.

Show that the number of molecules of the gas in the container is 2.3×10^{23}.

[3]

(c) Use data from **(b)** to estimate the mean distance between molecules in the gas.

mean distance = ... cm [3]

[Total: 8]

© UCLES 2016

3 **(a)** State what is meant by the *internal energy* of a system.

.....

.....

.....[2]

(b) Explain, by reference to work done and heating, whether the internal energy of the following increases, decreases or remains constant:

(i) the gas in a toy balloon when the balloon bursts suddenly,

.....

.....

.....

.....[3]

(ii) ice melting at constant temperature and at atmospheric pressure to form water that is more dense than the ice.

.....

.....

.....

.....[3]

[Total: 8]

© UCLES 2016

[Turn over

4 A mass hangs vertically from a fixed point by means of a spring, as shown in Fig. 4.1.

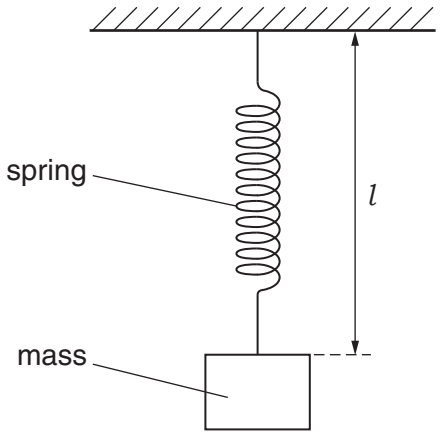

Fig. 4.1

The mass is displaced vertically and then released. The subsequent oscillations of the mass are simple harmonic.

The variation with time t of the length l of the spring is shown in Fig. 4.2.

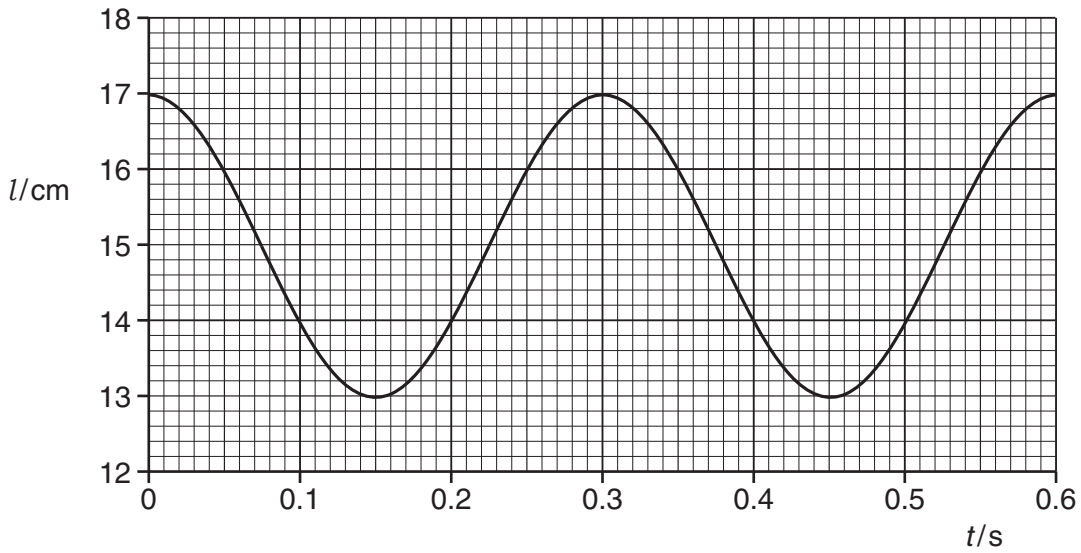

Fig. 4.2

(a) Use Fig. 4.2 to

(i) state two values of t at which the mass is moving downwards with maximum speed,

t = ... s and t = ... s [1]

© UCLES 2016

(ii) determine, for these oscillations, the angular frequency ω,

ω = ... rad s^{-1} [2]

(iii) show that the maximum speed of the mass is 0.42 m s^{-1}.

[2]

(b) Use data from Fig. 4.2 and **(a)(iii)** to sketch, on the axes of Fig. 4.3, the variation with displacement x from the equilibrium position of the velocity v of the mass.

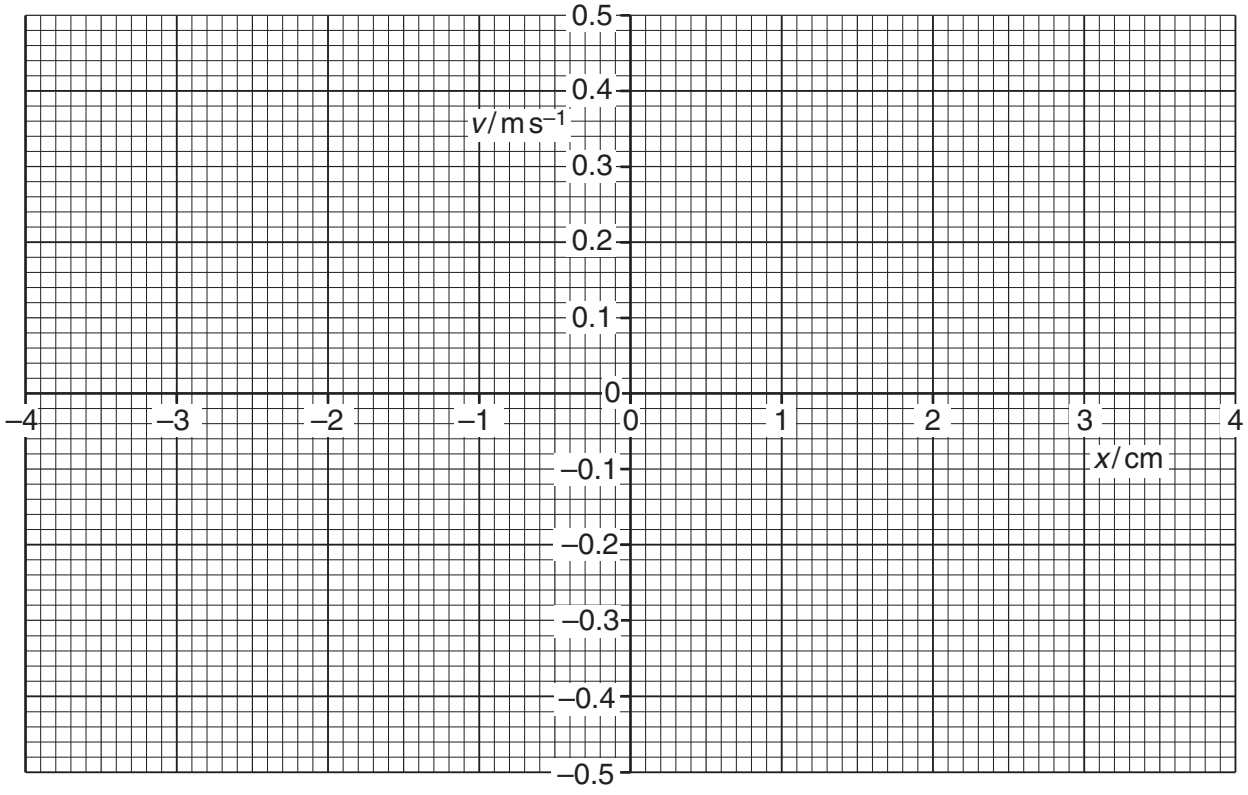

Fig. 4.3

[3]

[Total: 8]

5 Ultrasound may be used to obtain information about internal body structures.

(a) Suggest why the ultrasound from the transducer is pulsed.

.....

.....

.....[2]

(b) **(i)** State what is meant by *specific acoustic impedance*.

.....

.....

.....[2]

(ii) A parallel beam of ultrasound of intensity I_0 is incident normally on the boundary between two media, as shown in Fig. 5.1.

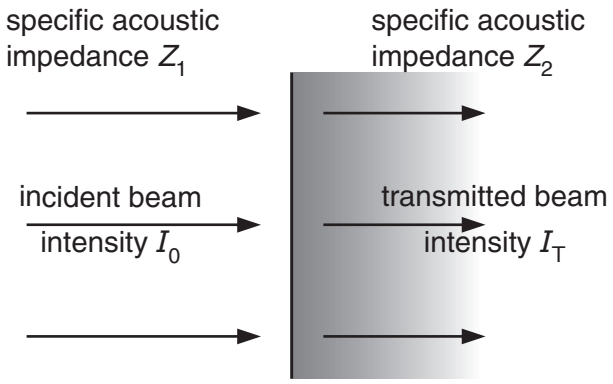

Fig. 5.1

The media have specific acoustic impedances Z_1 and Z_2.
The intensity of the ultrasound beam transmitted across the boundary is I_T.

Explain the significance of the magnitudes of Z_1 and of Z_2 on the ratio I_T/I_0.

.....

.....

.....

.....[2]

[Total: 6]

© UCLES 2016

6 Two solid metal spheres A and B, each of radius 1.5 cm, are situated in a vacuum. Their centres are separated by a distance of 20.0 cm, as shown in Fig. 6.1.

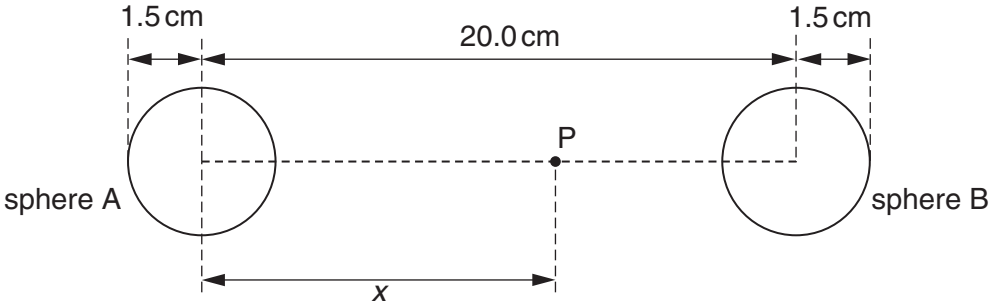

Fig. 6.1 (not to scale)

Both spheres are positively charged.

Point P lies on the line joining the centres of the two spheres, at a distance x from the centre of sphere A.

The variation with distance x of the electric field strength E at point P is shown in Fig. 6.2.

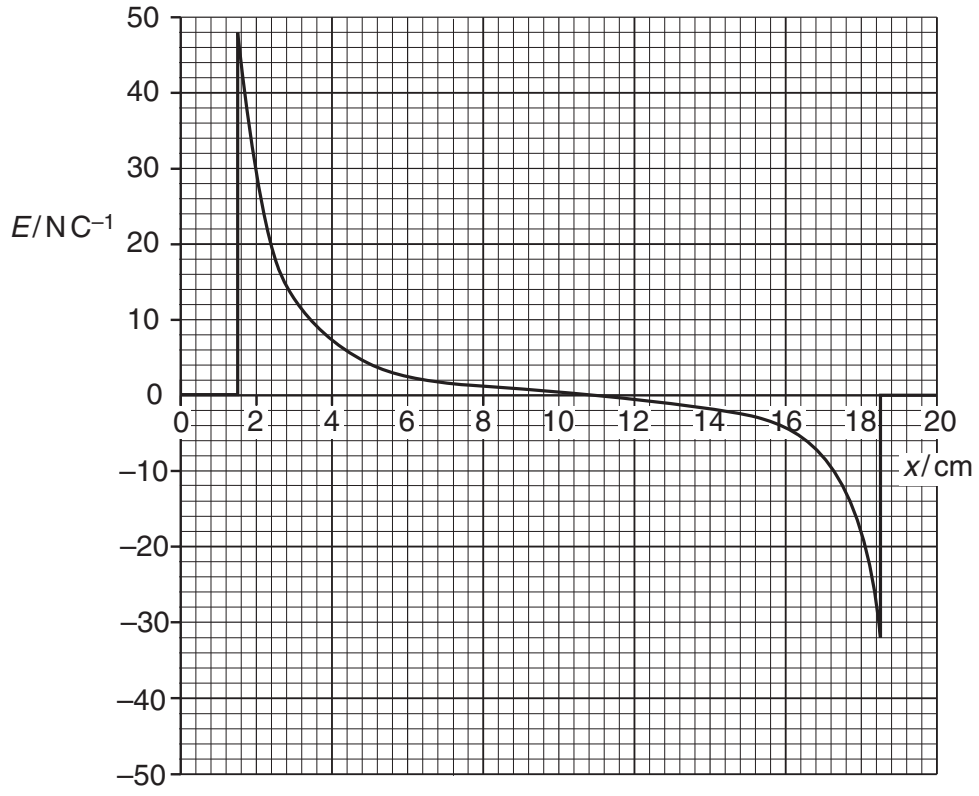

Fig. 6.2

© UCLES 2016

[Turn over

(a) Use Fig. 6.2 to determine the ratio

$$\frac{\text{magnitude of charge on sphere A}}{\text{magnitude of charge on sphere B}}.$$

Explain your working.

ratio = ...[3]

(b) The variation with distance x of the electric potential V at point P is shown in Fig. 6.3.

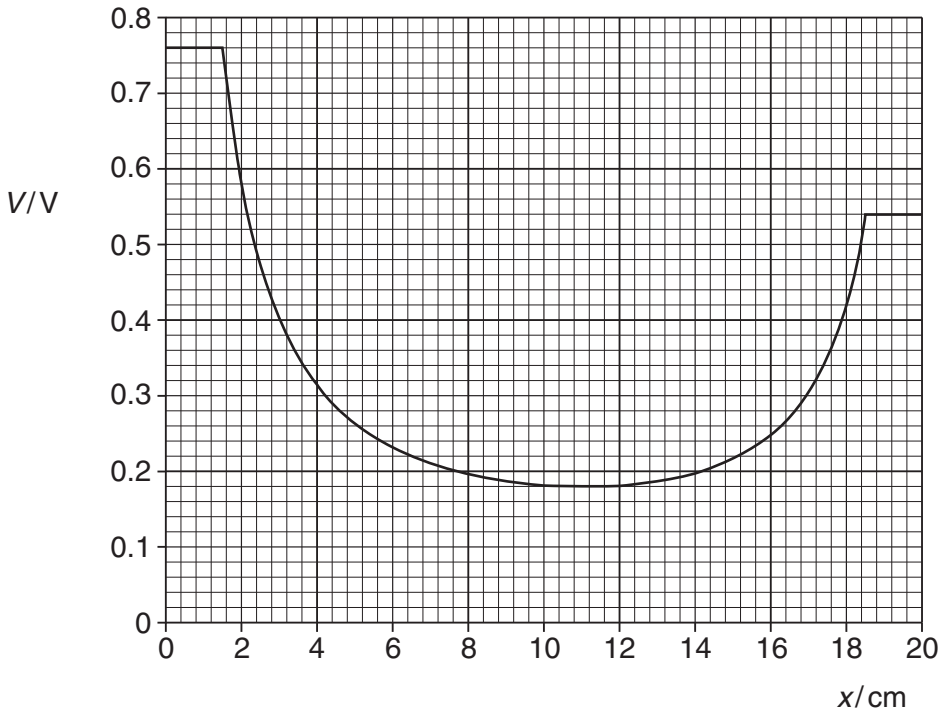

Fig. 6.3

© UCLES 2016

An α-particle is initially at rest on the surface of sphere A.
The α-particle moves along the line joining the centres of the two spheres.

Determine, for the α-particle as it moves between the two spheres,

(i) its maximum speed,

maximum speed = ... $m\,s^{-1}$ [3]

(ii) its speed on reaching the surface of sphere B.

speed = ... $m\,s^{-1}$ [2]

[Total: 8]

7 (a) (i) Define *capacitance*.

.....

.....[1]

(ii) Use the expression for the electric potential due to a point charge to show that an isolated metal sphere of diameter 25 cm has a capacitance of 1.4×10^{-11} F.

[2]

(b) Three capacitors of capacitances 2.0 μF, 3.0 μF and 4.0 μF are connected as shown in Fig. 7.1 to a battery of e.m.f. 9.0 V.

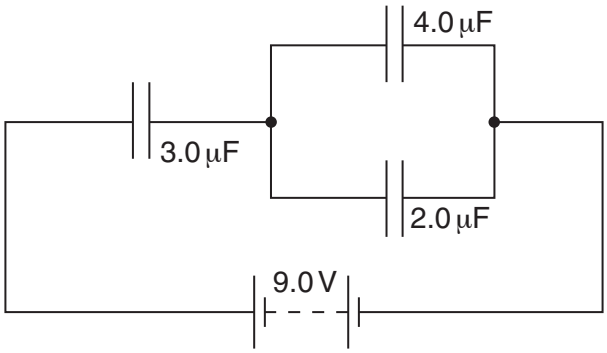

Fig. 7.1

Determine

(i) the combined capacitance of the three capacitors,

capacitance = ... μF [1]

(ii) the potential difference across the capacitor of capacitance 3.0 μF,

potential difference = ... V [2]

(iii) the positive charge stored on the capacitor of capacitance 2.0 μF.

charge = ... μC [2]

[Total: 8]

8 A circuit incorporating an ideal operational amplifier (op-amp) is shown in Fig. 8.1.

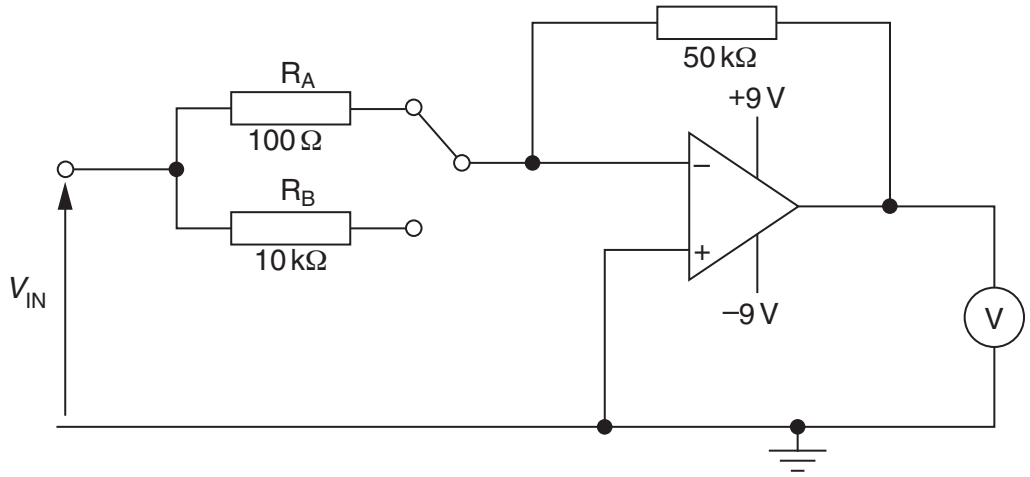

Fig. 8.1

The supply to the op-amp is +9 V / –9 V.
The output of the amplifier is measured using a voltmeter having a range 0 – 5.0 V.

A switch enables the inverting input to the op-amp to be connected to either resistor R_A or resistor R_B.

(a) A positive potential $+V_{IN}$ is applied to the input to the circuit.

On Fig. 8.1, mark with the letter P the positive connection of the voltmeter such that the voltmeter shows a positive reading. [1]

(b) Calculate the potential V_{IN} such that the voltmeter has a full-scale deflection when the inverting input to the op-amp is connected to

(i) resistor R_A of resistance 100 Ω,

V_{IN} = ... V [2]

(ii) resistor R_B of resistance 10 kΩ.

V_{IN} = ... V [1]

(c) Suggest a use for this type of circuit.

.....

.....[1]

[Total: 5]

9 A stiff wire is held horizontally between the poles of a magnet, as illustrated in Fig. 9.1.

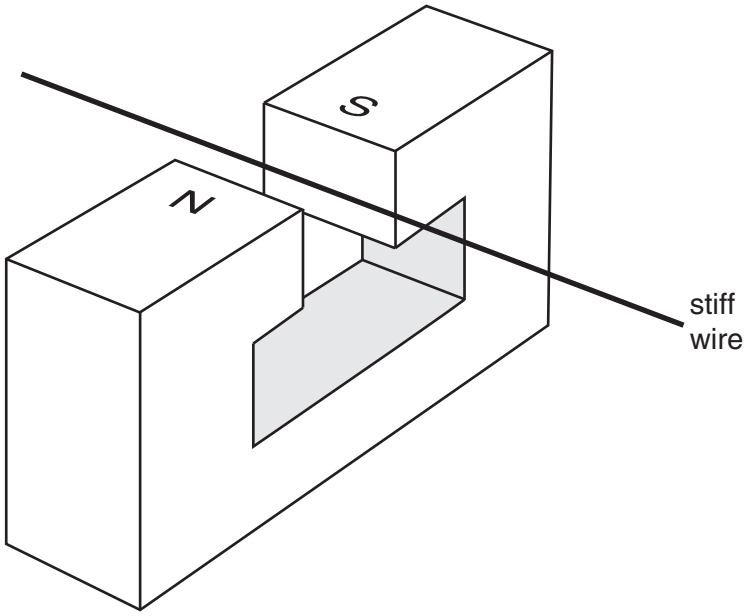

Fig. 9.1

When a constant current of 6.0 A is passed through the wire, there is an additional downwards force on the magnet of 0.080 N.

(a) On Fig. 9.1, draw an arrow on the wire to show the direction of the current in the wire.
Explain your answer.

.....

.....

.....

.....[3]

(b) The constant current of 6.0 A is now replaced by a low-frequency sinusoidal current.
The root-mean-square (r.m.s.) value of this current is 2.5 A.

Calculate the difference between the maximum and the minimum forces now acting on the magnet.

difference = ... N [4]

[Total: 7]

© UCLES 2016

10 Explain the function of the non-uniform magnetic field that is superimposed on a large uniform magnetic field in diagnosis using nuclear magnetic resonance imaging (NMRI).

.....

.....

.....

.....

.....

.....

.....

.....[4]

[Total: 4]

11 (a) State Faraday's law of electromagnetic induction.

.....

.....

.....[2]

(b) An alternating current is passed through an air-cored solenoid.
An iron core is inserted into the solenoid and then held stationary within the solenoid. The current in the solenoid is now smaller.

Explain why the root-mean-square (r.m.s.) value of the current in the solenoid is reduced as a result of inserting the core.

.....

.....

.....

.....

.....[3]

(c) Practical transformers are very efficient. However, there are some power losses.

State two sources of power loss within a transformer.

1. .....

.....

2. .....

.....
[2]

[Total: 7]

12 **(a)** State an effect, one in each case, that provides evidence for

(i) the wave nature of a particle,

.....[1]

(ii) the particulate nature of electromagnetic radiation.

.....[1]

(b) Four electron energy levels in an isolated atom are shown in Fig. 12.1.

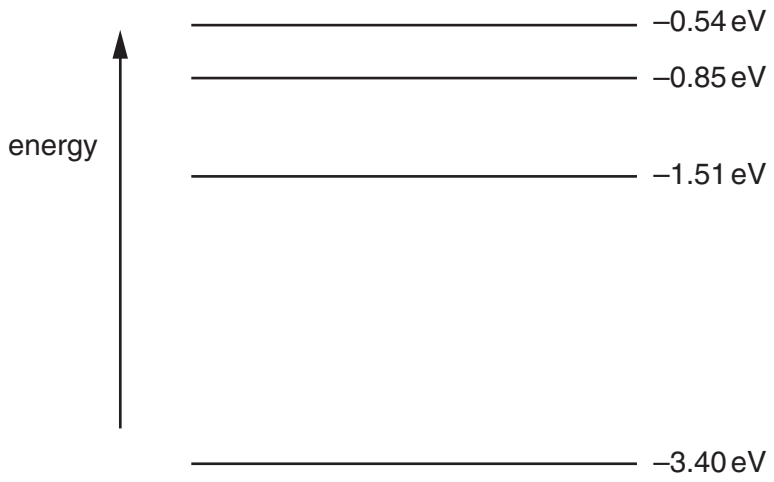

Fig. 12.1

For the emission spectrum associated with these energy levels,

(i) on Fig. 12.1, mark with an arrow the transition that gives rise to the shortest wavelength. [1]

(ii) show that the wavelength of the transition in **(i)** is 4.35×10^{-7} m.

[2]

(c) **(i)** State what is meant by the *de Broglie wavelength*.

.....

.....

.....[2]

(ii) Calculate the speed of an electron having a de Broglie wavelength equal to the wavelength in **(b)(ii)**.

speed = ... $m\,s^{-1}$ [2]

[Total: 9]

13 Outline the principles of computed tomography (CT scanning).

.....

.....

.....

.....

.....

.....

.....

.....

.....

.....[6]

[Total: 6]

14 Phosphorus-30 ($^{30}_{15}$P) was the first artificial radioactive nuclide to be produced in a laboratory. This was achieved by bombarding aluminium-27 ($^{27}_{13}$Al) with α-particles.

A partial nuclear equation to represent this reaction is

$$^{27}_{13}\mathrm{A}l + \alpha \rightarrow {}^{30}_{15}\mathrm{P} + \Phi$$

(a) State the full nuclear notation for

(i) the α-particle,

.....[1]

(ii) the particle represented by the symbol Φ.

.....[1]

(b) Data for the rest masses of the particles in the reaction are given in Fig. 14.1.

particle	mass / u
$^{27}_{13}Al$	26.98153
α	4.00260
$^{30}_{15}P$	29.97830
Φ	1.00867

Fig. 14.1

Calculate, for this reaction,

(i) the change in the total rest mass of the particles,

mass change = ... u [2]

(ii) the energy, in joule, equivalent to the mass change calculated in **(i)**.

energy = ... J [2]

(c) With reference to your answer in **(b)(i)**, comment on the energy of the α-particle such that the reaction can take place.

.....

.....

.....

.....[2]

[Total: 8]

Permission to reproduce items where third-party owned material protected by copyright is included has been sought and cleared where possible. Every reasonable effort has been made by the publisher (UCLES) to trace copyright holders, but if any items requiring clearance have unwittingly been included, the publisher will be pleased to make amends at the earliest possible opportunity.

To avoid the issue of disclosure of answer-related information to candidates, all copyright acknowledgements are reproduced online in the Cambridge International Examinations Copyright Acknowledgements Booklet. This is produced for each series of examinations and is freely available to download at www.cie.org.uk after the live examination series.

Cambridge International Examinations is part of the Cambridge Assessment Group. Cambridge Assessment is the brand name of University of Cambridge Local Examinations Syndicate (UCLES), which is itself a department of the University of Cambridge.

© UCLES 2016